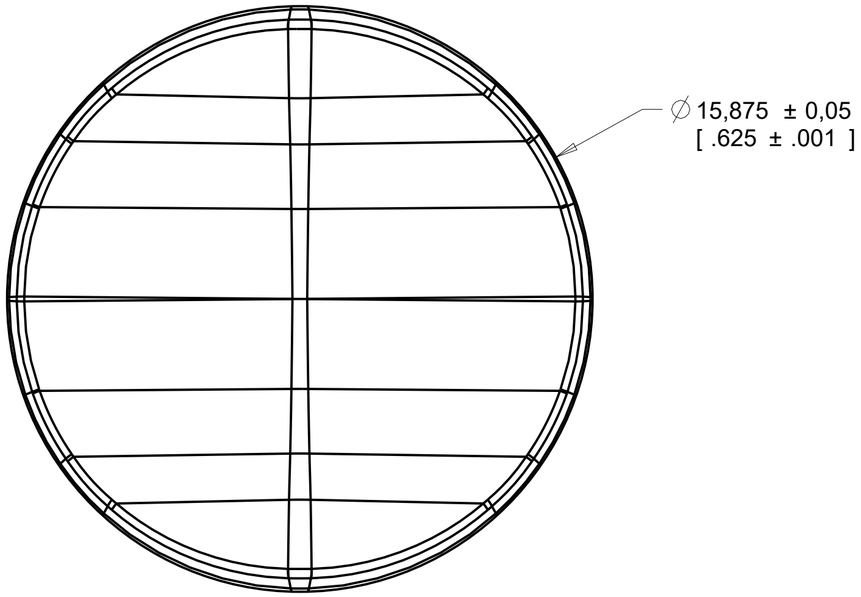

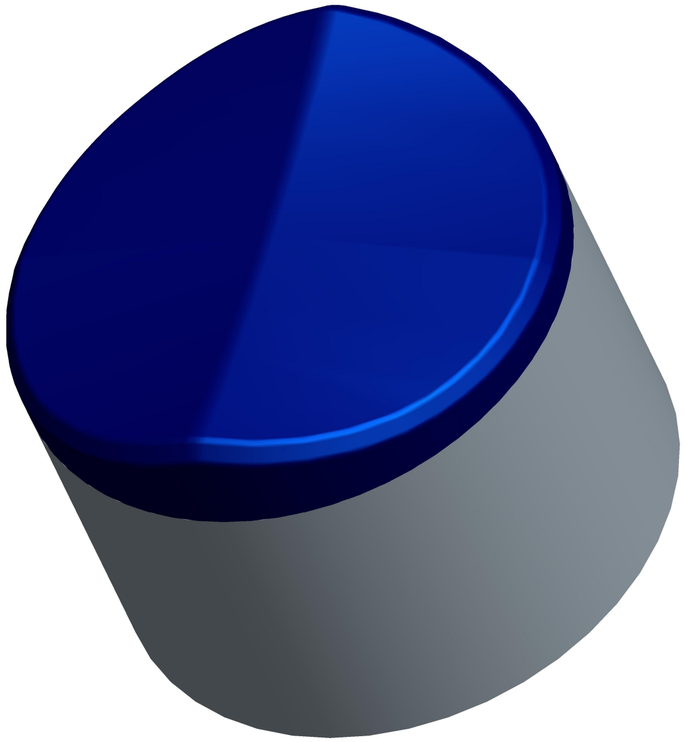

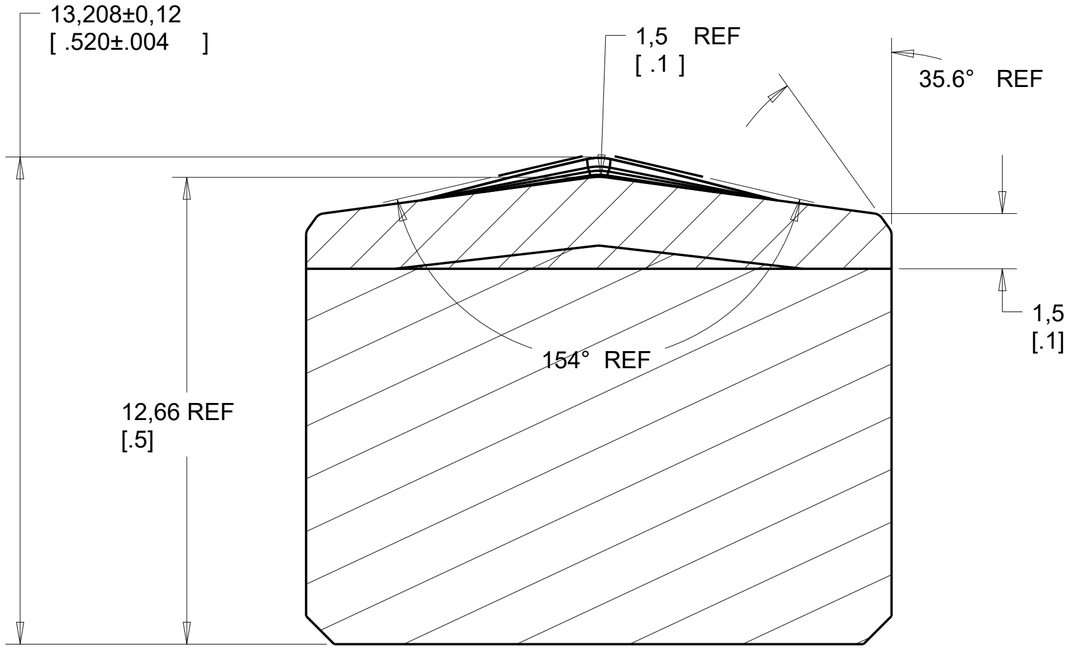

SECTION A-A
SCALE 8.000

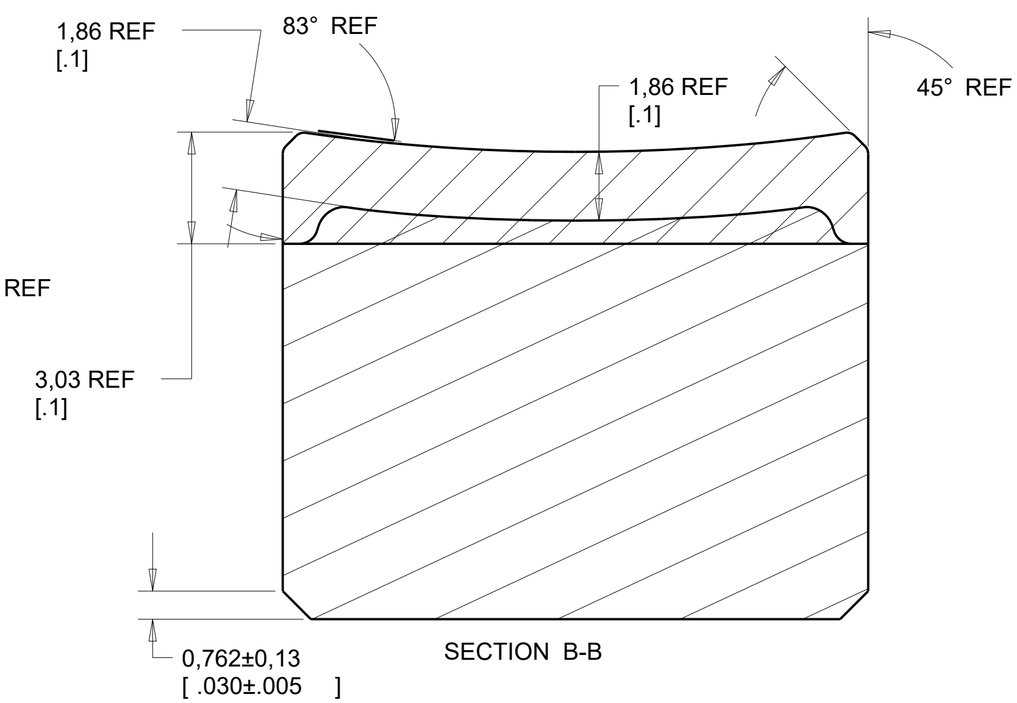

SECTION B-B

No.	Revision Description	By	App	Date
0				
1				
2				
3				

All dimenions in mm
Do not scale
Tolerances unless otherwise specified:

X	± 0.5
X.X	± 0.05
X.XX	± 0.025
Angular:	± 2.0 °

Surface finish 32 Micron Ra
Break all sharp corners

Description: SADDLE CUTTER

13.21HX15.875 ∅ 154° INCLUDED ANGLE 7° CONCAVE

Part No.

Material

Drawing #

This drawing and the information it contains are confidential and proprietary property of DiaPac LLC. Reproduction is prohibited without written consent. 2009, DiaPac